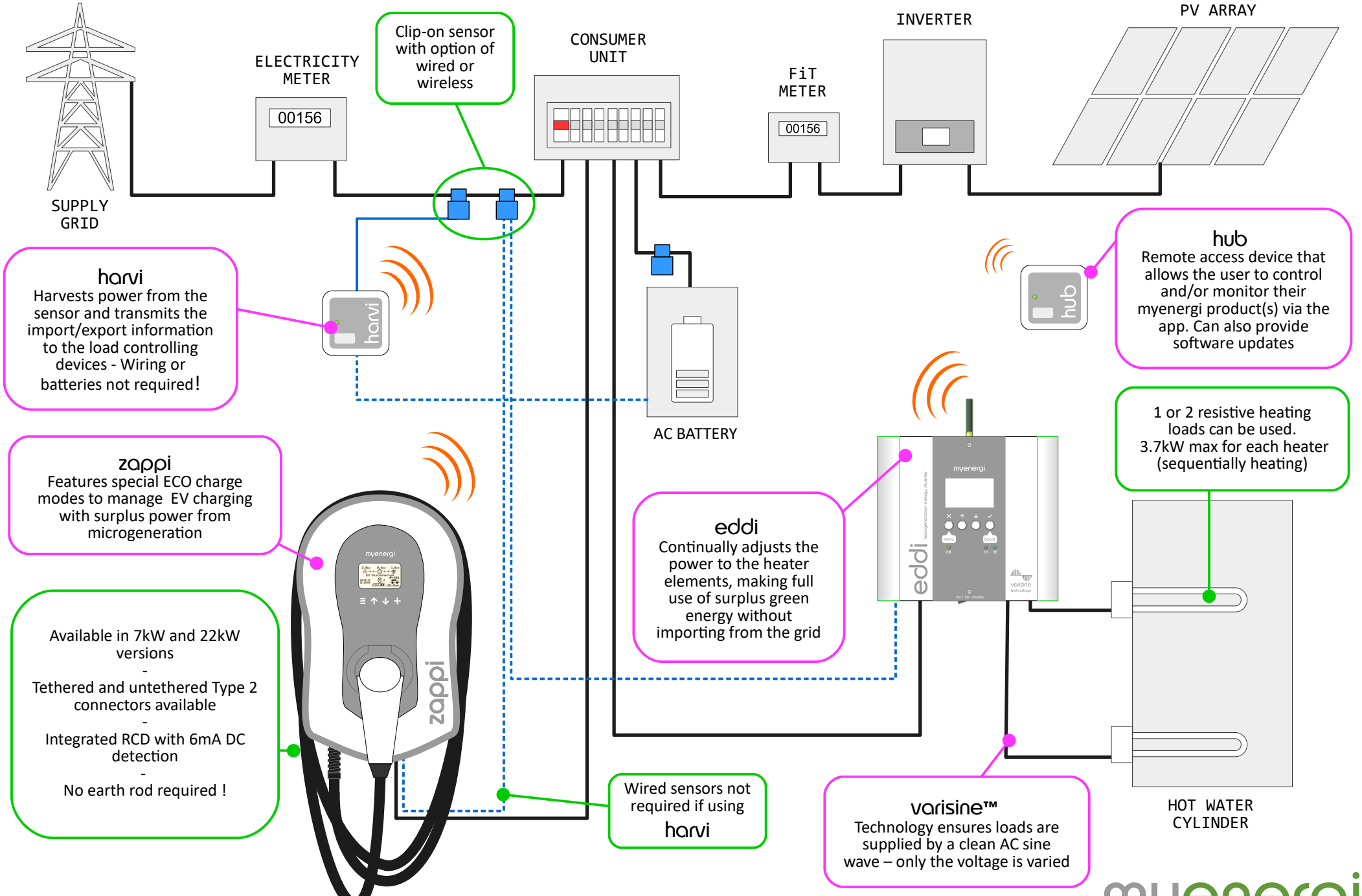

System overview v2.1 – February 2019